RoHS Compliant

Drawing For Reference Only

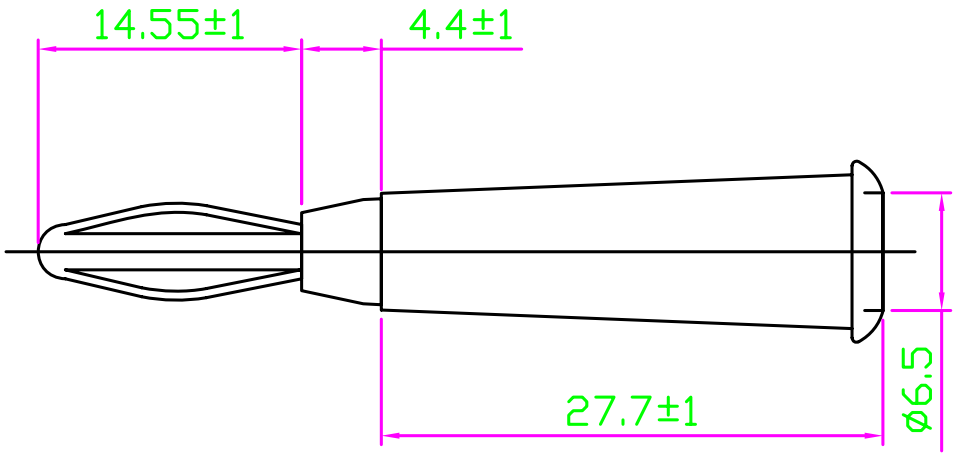

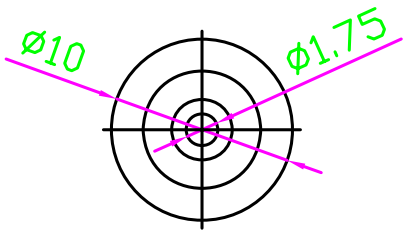

Technical requirement :

1. This product should meet EU RoHS related requirement.
2. The surface of plastic part should be without any crackle such as burr,lack,and so on phenomenon.
3. The surface of metal part should be without any defect such as scaur,nick,oxidation and plating problem.
4. The electronic performance should be the same as spec.
5. The un-specified tolerance is : <6±0.1
   6~20±0.2
   >20±0.3

DCI DRAGON CITY INDUSTRIES LIMITED			Design	K.W Law	Remark		Scale	
			Drawing	W.K Yeung	Remark		Material	
Item Name	Banana Plug	Tolerance :	Check	K.L Wong	Remark		Drawing No.	90328-1000
Item No.	BP-112-EN	Unit : mm	Approval	K.W Chan	Remark		Sheet	