由 Autodesk 教育版产品制作

D1RFRD006

REVISION RECORD				
REV	ECO	DESCRIPTION	DRFT	DATE
1		Drawing emend	CSX	04/21/06"
2		增加VDE、CE刻字	Yej	02/27/08"
3		图面更新	Yej	03/28/08"
4		增加自动化方针	WLM	09/23/08"
5	10-0329	增加标注尺寸	COCO	10/04/10"

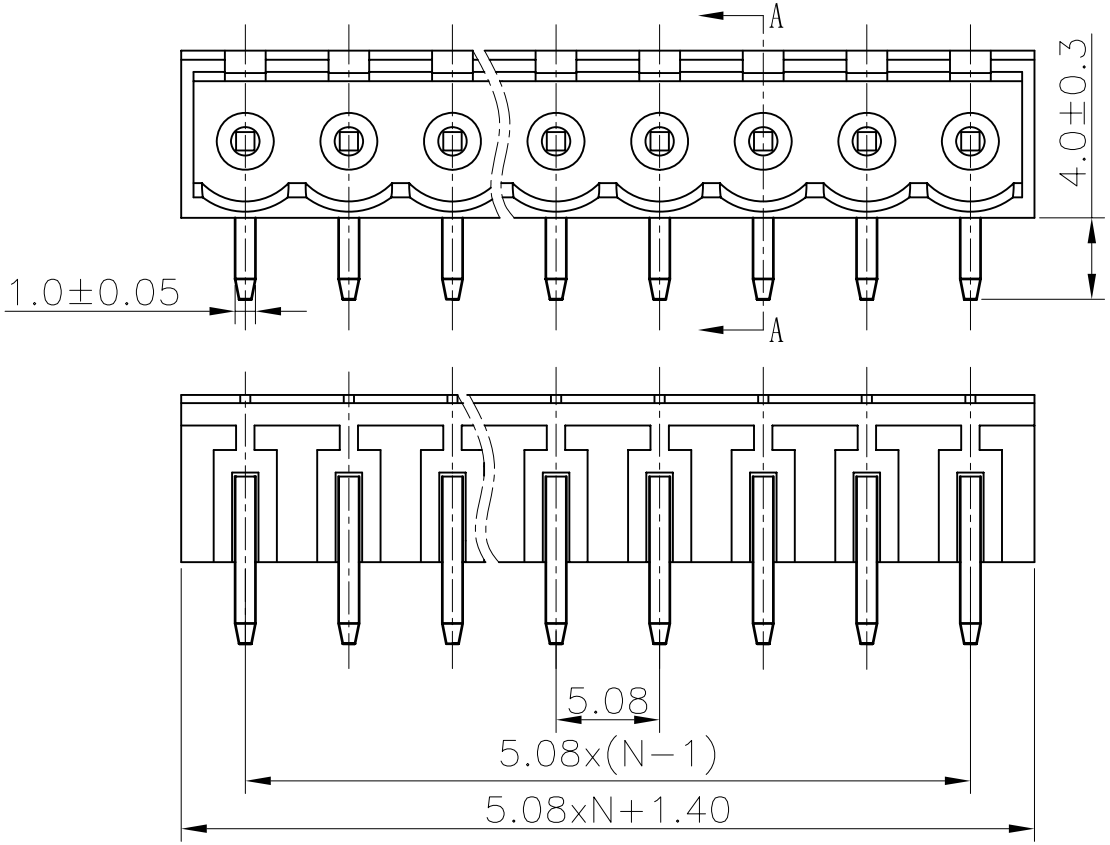

VIEW B

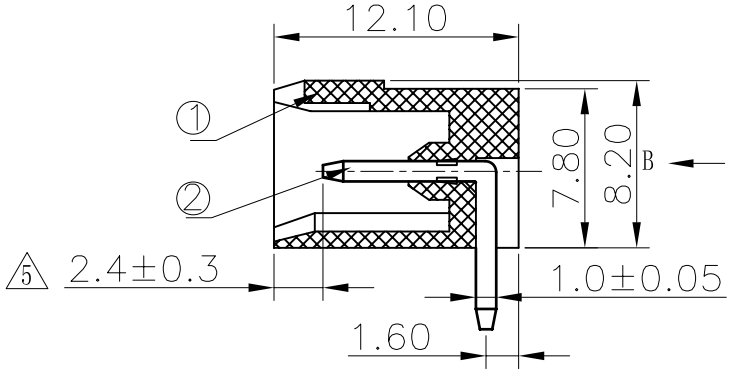

SECTION A-A

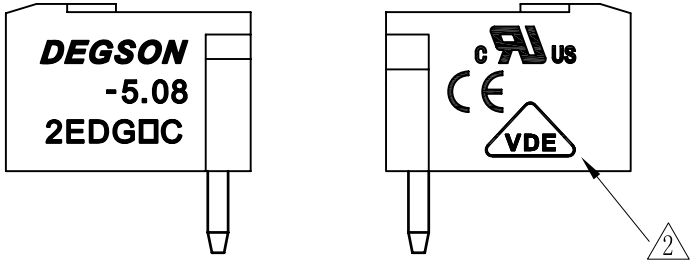

Notes:

1. Pitch: 5.08mm, poles:2-24p
2. Rated voltage/current:UL 300V/15A
   VDE 320V/20A
3. Operation temperatures:-40° C~+105° C
4. Withstanding voltage: AC2000V/1Min
5. Insulation resistance:5000MΩ/DC1000V
6. Undimensioned Tolerances:

Pitch range in mm			Naminal dimension range in mm					
to 6	over 6 to 10	over 10 to 24	to 30	over 30 to 60	over 60 to 100	over 100 to 150	over 150	⌒ ▱
±0.10	±0.15	±0.25	±0.2	±0.3	±0.5	±0.7	±1.0	0.05/10

ITEM	NAME OF PART	NO. OF PART	Q"TY	MATERIAL	NOTES
2	2EDGR-Pin header	4 1008B00120(H)	XX	Brass	Automatic assembly
2	2EDGR(A)Pin header	1008B00040(H)	XX	Brass	Manual assembly
1	2EDGRC-5.08-Housing	1009A0YXXA(H)	1	PA66	UL94V-0

DETACHED LISTS

MM (INCH)

TOLERANCES EXCEPT AS NOTED

MM
.0 ±
.00 ±
.000 ±

ANGLES ± 1°

THIRD ANGLE PROJECTION

DFTO HW	DATE 08/23/05"	
CHKD	DATE	
MFO	DATE	
APPVL	DATE	
MATERIAL :		
G.E :		
FINISH :		
SCALE : 1:1		

DEGSON® 宁波高正电子有限公司 DEGSON ELECTRONICS CO., LTD

NAME 2EDGRC-5.08-XXP-1Y-00A(H)

DRAWING NO. 2EDGRC-5.08-E06 /PART NO.

SIZE A3 REV T5 10/04/10"

DO NOT SCALE DRAWING SHEET 1 OF 1

由 Autodesk 教育版产品制作
由 Autodesk 教育版产品制作
由 Autodesk 教育版产品制作