5X7 Dot Character VFD Module — CU16025SCPB-T20A

- 2 Lines of 16 Characters 5mm High
- High Speed Parallel/Serial Interface
- Operating Temp -10°C to +65°C
- Single 5V Supply
- High Brightness Blue Green Display
- ASCII, Katakana & Extended Character Font
- 16 User Definable Character RAM

The module includes the Vacuum Fluorescent Display glass, driver and micro-controller ICs with refresh RAM, character generator and interface logic.
The high speed 8 bit parallel interface is 5V CMOS compatible suitable for connection to a host CPU bus. The asynchronous serial interface accepts baud rates up to 19,200 with or without parity. Two character font tables can be hardware or software selected. User defined characters and many control commands are available.

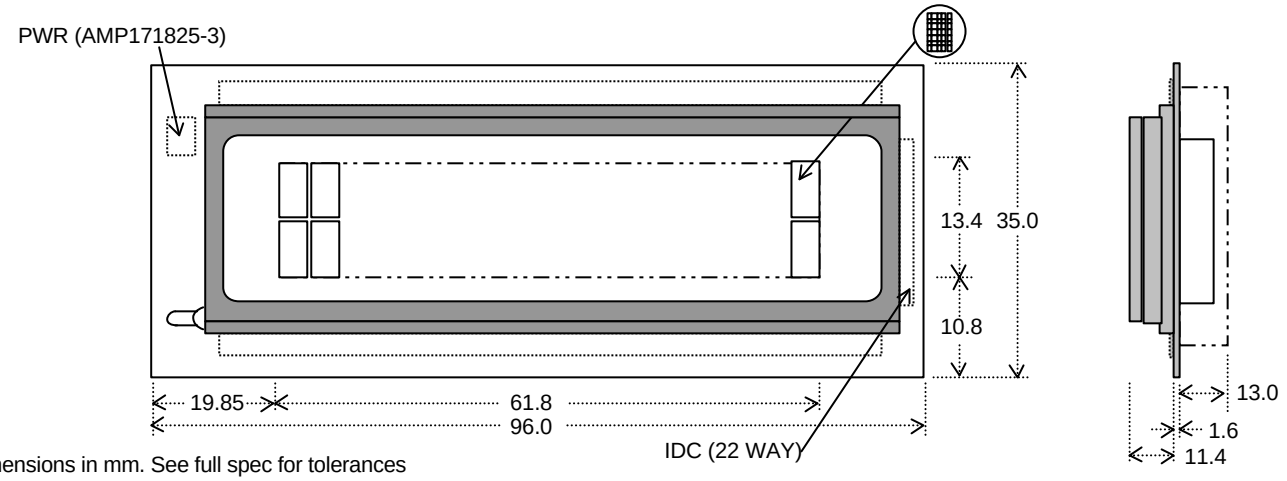

Dimensions in mm. See full spec for tolerances

ELECTRICAL SPECIFICATION

Parameter	Symbol	Value	Condition
Power Supply Voltage	V_{CC}	5.0VDC +/- 5%	G_{ND}=0V
Power Supply Current	I_{CC}	150mADC typ.	Vcc=5V
Logic High Input	V_{IH}	2.0VDC min.	V_{CC}=5V
Logic Low Input	V_{IL}	0.8VDC max.	V_{CC}=5V
Logic High Output	V_{OH}	2.4VDC min.	I_{OH} = -2.0mA
Logic Low Output	V_{OL}	0.5VDC max.	I_{OL} =2.0mA

The power on rise time should be less than 50ms.The inrush current at power on can be 2 x I_{CC}.

OPTICAL and ENVIRONMENTAL SPECIFICATIONS

Parameter	Value
Character Size/Pitch (XxY mm)	2.55 x 4.7/3.95 x 8.7
Dot Size/Pitch (XxY mm)	0.35 x 0.5/0.55 x 0.7
Luminance	700 cd/m^2 (204 fL) Typ.
Colour of Illumination	Blue-Green (Filter for colours)
Operating Temperature	-10°C to +65°C
Storage Temperature	-40°C to +85°C
Operating Humidity (non condensing)	20 to 80% RH @ 25°C

CHARACTER FONTS

International Font — Additional Katakana Font

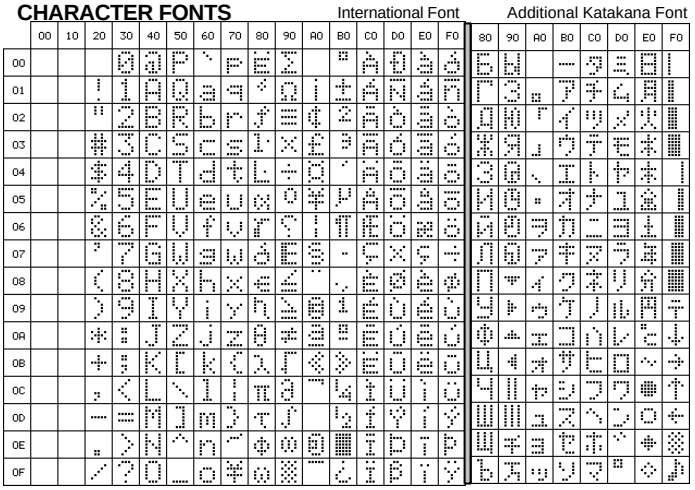

SOFTWARE COMMANDS

Instruction	D0-D7	Instruction	D0-D7
Back Space	08H	Katakana Font	19H
Horizontal Tab	09H	Escape	1BH
Line Feed	0AH	➢ Send User Font	+43H
Form Feed	0CH	➢ Position cursor	+48H
Carriage Return	0DH	➢ Software Reset	+49H
Clear Display	0EH	➢ Luminance	+4CH
Increment Write Mode	11H	➢ Flickerless Write	+53H
Vertical Scroll Mode	12H	➢ Cursor Blink Speed	+54H
5x7 Block Cursor On	15H	Character Data	20H+
Cursor Off	16H	User Character Data	00H+
International Font	18H		

IDC DATA CONNECTOR

Pin	Sig	Pin	Sig
1	D7	12	BUSY
2	D6	13	G_{ND} (0V)
3	D5	14	G_{ND} (0V)
4	D4	15	V_{CC} (5V)
5	D3	16	V_{CC} (5V)
6	D2	17	V_{CC} (5V)
7	D1	18	G_{ND} (0V)
8	D0	19	G_{ND} (0V)
9	$\overline{WR}$	20	G_{ND} (0V)
10	$\overline{CS}$	21	G_{ND} (0V)
11	S_{IN}/T_{EST}	22	$\overline{RESET}$

PCB JUMPERS (O)PEN (L)INK

Baud	J2	J1	J0
19200	O	O	O
9600	O	O	L
4800	O	L	O
2400	O	L	L
1200	L	O	O

Parity	J4	J3
EVEN	O	O
ODD	O	L
NONE	L	L / O

TIMING PARAMETERS (min)

Data Set Up To Write	50ns
Write Pulse Width	120ns
Hold After Write	10ns

Subject to change without notice. Detailed specification on request.
IUK Doc Ref:0844 Iss:5 2 OCT00

3 PIN POWER CONNECTOR

Pin	Sig
1	V_{CC}(5V)
2	S_{IN}/T_{EST}
3	G_{ND} (0V)

Mates with AMP171822-3

Noritake Sales Office Tel Nos
Nagoya Japan: +81 (0)52-561-9867
Canada: +1-416-291-2946
Chicago USA: +1-847-439-9020
Munchen (D): +49 (0)89-3214-290
Itron UK: +44 (0)1493 601144
Rest Europe: +49 (0)61-0520-9220
www.noritake-itron.com